# Systec D-23

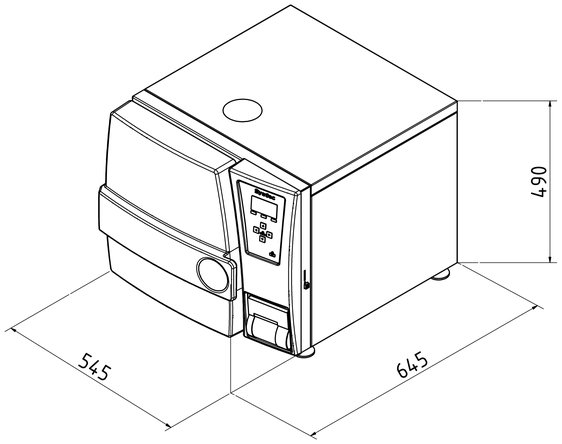


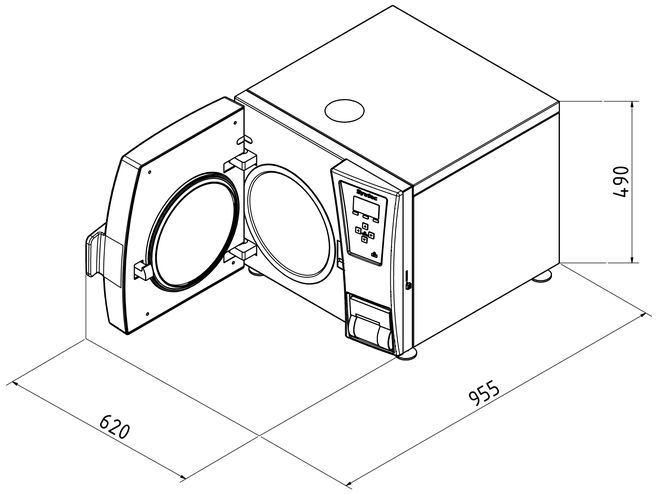


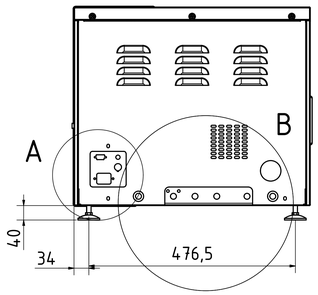


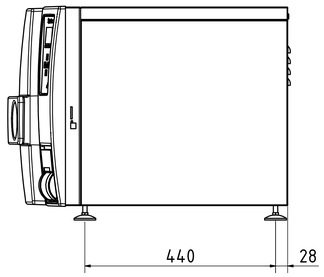


A

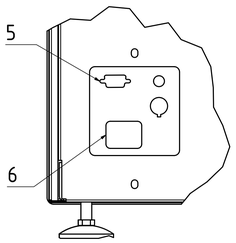


B2 (Systec DB / Systec DE)

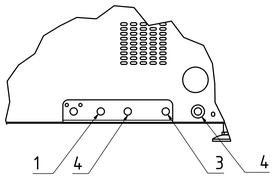


B1 (Systec DX)

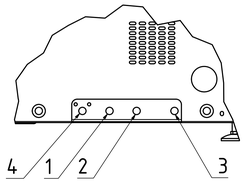


| Technical data | | | | | | |
|---|---|---|---|---|---|---|
| No. | Description | Size | DX | DE | DB | Comments |
| 1 | Tap water* | 3/4" ET | X | X | -- | ≥ 1bar water pressure<br>Σ alkaline earth ions ≤ 2,0 mmol/l, conductivity max. 300 µS/cm, 11°dH, 200mg/l CaCO3 |
| 2 | Demineralized water* | 3/4" ET | X | O | -- | ≥ 1bar water pressure<br>Σ alkaline earth ions < 0,02 mmol/l, conductivity: 0,1 - 15 µS/cm |
| 3 | Compressed air | NW 7,2 | O | O | -- | min. 3-10bar / 50l/min., ≤ Class 4 according to DIN ISO 8573,<br>Only with "water cooling with support pressure" |
| 4 | Drain | 3/4" ET | X | X | X | Systec DX and Systec DE<br>Temperature-resistant installation (103°C in case of failure)<br>Temperature is controlled at 70°C (setable)<br>Systec DB<br>Temperature-resistant installation up to 103°C<br>No controlled temperature, Drain height max. ≤ 40cm above the floor |
| 5 | Interface | | X | X | -- | RS-232 / RS-485 (Ethernet Network and USB compatible) |
| 6 | Power supply*[2] | | X | X | X | 1x230V+N+PE / 50/60Hz / 16 Ampere / CEE 7/4 socket, Type F |

| | Art.No.: DX | Art.No.: DE | Art.No.: DB | Heat emission | Net weight | Test weight*[3] |
|---|---|---|---|---|---|---|
| Systec D-23 | 1923 | 1523 | 1900 | <400 Watt/h | 80 kg | 103 kg |

X = Standard O = Optional -- = Not Available Length dimensions in mm

* Other media connections available on request

*[2] Other voltages available on request

*[3] Test weight: chamber completely filled with water for pressure test

Contact area of the feet: 1963.5mm² per foot - Total 7854mm² for 4 pieces (Ø50mm)

| | | | | | | | |
|---|---|---|---|---|---|---|---|
| Allgemein-toleranz ISO 2768 T1-m | Oberfläche | Maßstab: | Gewicht: | | | | |
| | | Werkstoff: Bemerkung: | | | | | |
| Datum | Name | | | | | | |
| Gezeichnet 13.05.2014 | Ziska | Systec D-23 | | | | | |
| Kontrolliert | | | | | | | |
| Norm | | | | | | | |
| Systec the autoclave company | | Zng.-Nr.: AZ 1923 EN | | Rev.: 1 | 1 / A0 | | |
| Blatt/a | Änderungen | Datum | Name | | | | |