Systec HX-580-2D / HX-780-2D / HX-980-2D
HX-1180-2D / HX-1380-2D / HX-1580-2D

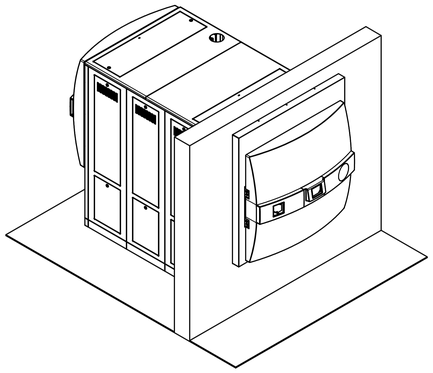

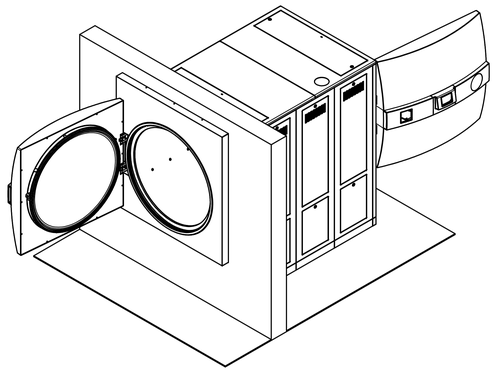

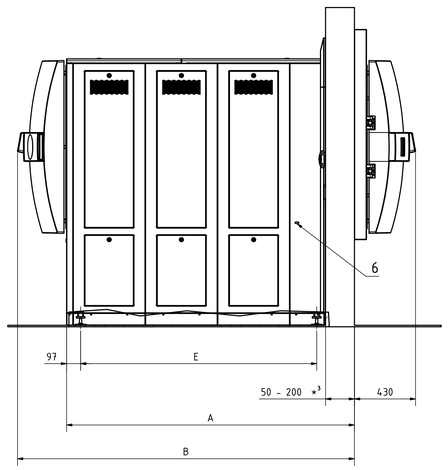

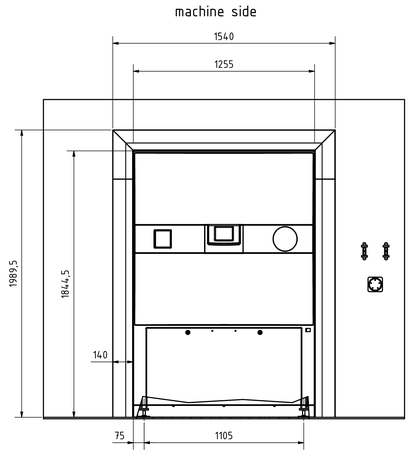

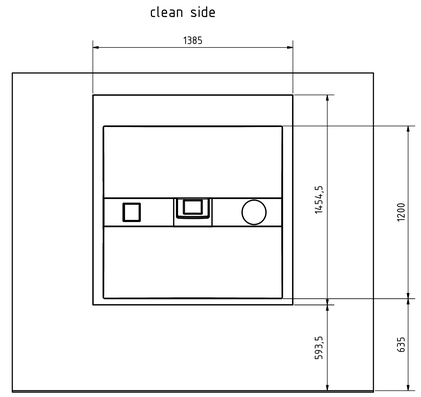

top view / open

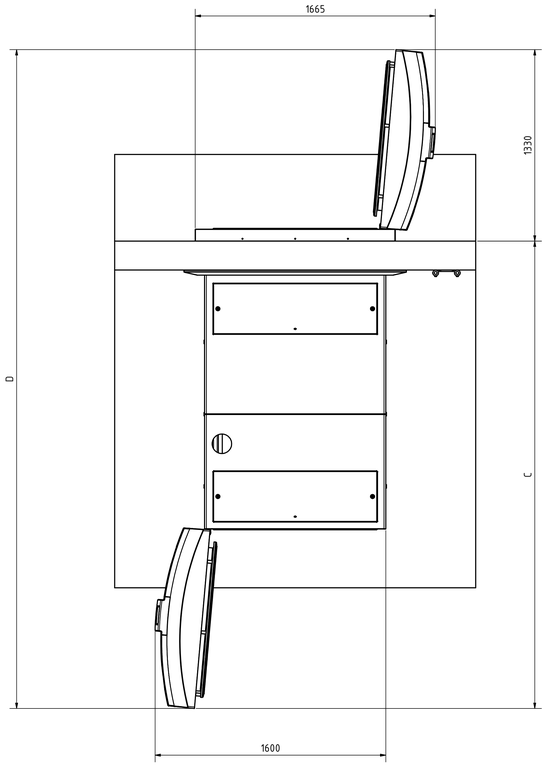

wall opening dimensions

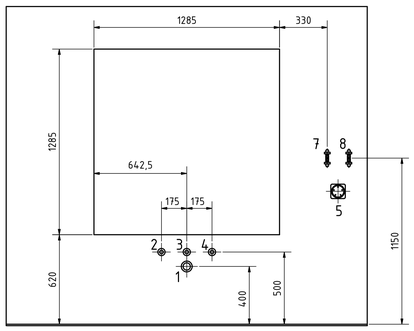

Technical Data				
No.	Description	Size	HX	Comments
1	Drain	1" ET	X	temperature-resistant installation (103°C in case of failure) Temperature is controlled at 70°C (setable) Drain height max. ≤ 40 cm above the floor
2	Tap water*	3/4" ET	X	≥ 1 bar water pressure Σ alkaline earth ions ≤ 2,0 mmol/l, conductivity max. 300 µS/cm, 11°dH, 200 mg/l CaCO3
3	Demineralized water*	3/4" ET	X	≥ 1 bar water pressure Σ alkaline earth ions ≤ 0,02 mmol/l, conductivity between 0,1 - 15 µS/cm
4	Compressed air	NW 7,2	X	min. 7-10 bar, 500 l/min, ≤ Class 4 according to DIN ISO 8573
5	Power supply		X	3x400V + N + PE / 63A fuse / CEE socket
6	Interface		X	RS-232 / RS-485 (Ethernet network and USB compatible)
7	Tap for tap water			
8	Tap for demineralized water			

	Art.-Nr.	A	B	C	D	E	Heat emission	Net weight	Test weight *2
Systec HX-580-2D	2271	745	1090	1990	3320	435	<1800 Watt/h	ca. 810 kg	ca. 1500 kg
Systec HX-780-2D	2275	995	1340	2240	2570	635	<2000 Watt/h	ca. 850 kg	ca. 1735 kg
Systec HX-980-2D	2285	1245	1590	2490	3820	885	<2200 Watt/h	ca. 920 kg	ca. 2000 kg
Systec HX-1180-2D	2295	1495	1840	2740	4070	1135	<2400 Watt/h	ca. 990 kg	ca. 2270 kg
Systec HX-1380-2D	2305	1745	2090	2990	4220	1385	<2600 Watt/h	ca. 1050 kg	ca. 2525 kg
Systec HX-1580-2D	2315	1995	2340	3240	4570	1635	<2800 Watt/h	ca. 1110 kg	ca. 2780 kg

X = Standard O = Optional -- = not available Length dimensions in mm

Contact area of feet: 5026,5 mm^2 per foot -- Total contact area 20106 mm^2 of all 4 feet (Ø80 mm)

The required space left and right of the unit for maintenance has to be at least 40 cm. -- Can be changed upon request!

Position of media connections can be changed upon request!

* Other media connections available on request
*2 Test weight: chamber completely filled with water for pressure test
*3 Art.-Nr. 2271 max. 150 mm

Allgemeintoleranz ISO 2768 T1-m | Oberfläche | Maßstab: | Gewicht:
Werkstoff:
Bemerkung:
Gezeichnet 30.06.2014 JRU
Systec HX-Ø1000-2D
Systec the autoclave company
Zng.-Nr.: AZ 2271 EN | Rev.: 1 | 1 | A0
0 Original